FY. All Branch

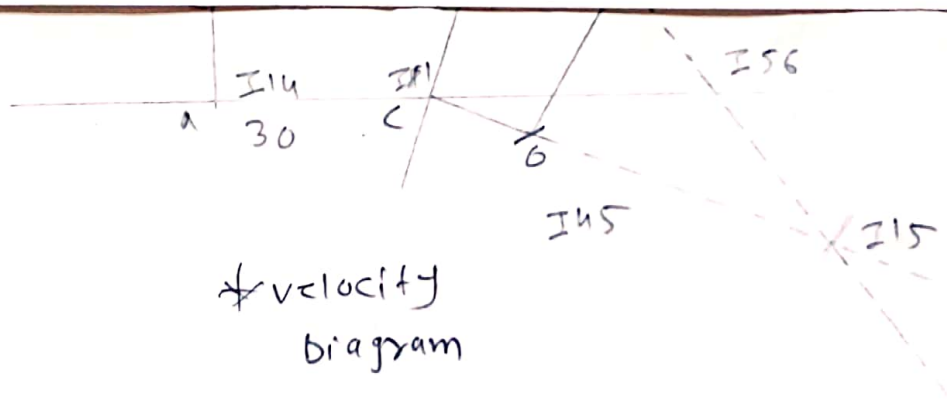

* velocity diagram

FY

DR. BABASAHEB AMBEDKAR TECHNOLOGICAL UNIVERSITY, LONERE

Regular End Semester Examination – Summer 2022

Course: B. Tech. **Branch: All branches (Group B)** **Semester: II**

Subject Code & Name: BTBSP202 Engineering Physics

Max Marks: 60 **Date:20/08/2022** **Duration: 3.45 Hr.**

Instructions to the Students:

1. *All the questions are compulsory.*
2. *The level of question/expected answer as per OBE or the Course Outcome (CO) on which the question is based is mentioned in ( ) in front of the question.*
3. *Use of non-programmable scientific calculators is allowed.*
4. *Assume suitable data wherever necessary and mention it clearly.*

		(Level/CO)	Marks
Q. 1	**Solve Any Two of the following.**		
A)	In case of Forced vibrations, prove that $$A = \frac{f}{\sqrt{(\omega^2 - p^2)^2 + 4b^2p^2}}$$	(CO1) (Understand)	6
B)	Explain the construction and working for production of ultrasonic waves using Piezoelectric Oscillator.	(CO1) (Understand)	6
C)	Write any two applications of ultrasonic waves. Calculate the thickness of quartz plate which is used to produce ultrasonic waves of 2 MHz. Density of quartz is 2.65×10^3 kg/m^3 and Young's modulus is 8×10^{10} N/m^2	(CO1) (Remember & Understand)	6
Q.2	**Solve Any Two of the following.**		
A)	Derive an expression for diameter of Newton's bright and dark rings.	(CO2) (Understand)	6
B)	Explain the construction and working of Ruby Laser.	(CO2) (Understand)	6
C)	State and explain Brewster's law. With a slab of flint glass, the angle of polarization is found to be $62^0\ 24'$ Calculate the refractive index of the flint glass.	(CO2) (Remember & Understand)	6
Q. 3	**Solve Any Two of the following.**		
A)	With neat diagram, explain the construction and working of Bainbridge Mass Spectrograph.	(CO3) (Understand)	6
B)	Explain the construction and working of Geiger Muller Counter.	(CO3) (Understand)	6
C)	Derive Schrodinger's time independent wave equation.	(CO3) (Understand)	6
Q.4	**Solve the following questions.**		
A)	Calculate atomic radii in SC, BCC and FCC lattices with suitable diagrams.	(CO4) (Understand)	6
B)	Explain characteristics and continuous X-ray spectra.	(CO4) (Understand)	6
Q. 5	**Solve Any Two of the following.**		
A)	Explain B-H curve for ferromagnetic materials. Define the terms Coercivity and Retentivity.	(Understand)	6
B)	Distinguish between Type I and Type II superconductors.	(Understand)	6
C)	What is Hall effect? Derive an expression for Hall Voltage and Hall Coefficient.	(Remember) & (Understand)	6

*** End ***

DR. BABASAHEB AMBEDKAR TECHNOLOGICAL UNIVERSITY, LONERE

Regular End Semester Examination – Summer 2022

Course: B. Tech. **Branch: FY Group B** **Semester: II**

Subject Code & Name: Communication Skills (BTHM204)

Max Marks: 60 **Date: 26/08/2022** **Duration: 3.45 Hr.**

Instructions to the Students:

1. *All the questions are compulsory*
2. *The level of question/expected answer as per OBE or the Course Outcome (CO) on which the question is based is mentioned in ( ) in front of the question*
3. *Use of non-programmable scientific calculators is allowed*
4. *Assume suitable data wherever necessary and mention it clearly*

		(Level/CO)	Marks
Q. 1	**Answer Any Two of the following.**		
A)	Differentiate Verbal and Non-verbal Communication and explain their role at workplace communication	L4/CO1	6
B)	Elucidate the function of communication in an organization.	L3/CO1	6
C)	Explain Socio-psychological barrier in detail. Suggest your ways to overcome it.	L2/CO1	6
Q.2	**Answer Any Two of the following.**		
A)	Transcribe the following words into Phonemic script. A) Photography B) Police C) Education D) College E) Garage F) Data	L3/CO2	6
B)	Does the study of Phonemic symbols and Articulation help you? Discuss in detail.	L3/CO2	6
C)	Explain the mechanism of articulation in detail along with your benefit of it to improve your pronunciation.	L2/CO2	6
Q. 3	**Answer Any Two of the following.**		
A)	How will you make your presentation more effective?	L3/CO3	6
B)	Explain in detail how you prepare and appear for an interview.	L2/CO3	6
C)	What are your methods and strategies to contribute in GD?	L3/CO3	6
Q.4	**Answer the following:**		
A)	Use the correct form of Tense: 1) Look! Rajni (go) .....to the movie yesterday. 2) By the time the doctor (arrive).....at the home, the patient (die)....	L2/CO4	4

3) The vehicle (break)….. down and they (have) to walk home.

4) Rishik ….music class every Monday. (attend, attends, will attend, will be attending)

B) Write the correct sentence: L2/CO4

1) I am (a/an)……..university student.

2) Viraj is (a, an, the)….best student in the class. 4

3) Does she has a car?

4) I am having two brothers and one sister.

C) Write antonyms for: L1/CO4

A) Obfuscate B) Agnostic C) Elixir D) Condonation 4

Q. 5 Answer Any Two of the following.

A) Explain the structure of Technical Report in detail. L2/CO5 6

B) Write a job application for the post of Trainee Engineer to Divisional Manager, CEAT, Bhandup Plant, Mumbai - 400042. Attach your Résumé with your application. (Assume required details) L3/CO5 6

C) You have received your order of twenty PCs for your office. However, you noticed that two PCs are damaged in transit.

Draft a letter of Complaint to the Manager of Sales Dept. HP, Mumbai Branch - 400001 asking for compensation. (Use Modified Block Format) L3/CO5 6

***** End *****

DR. BABASAHEB AMBEDKAR TECHNOLOGICAL UNIVERSITY, LONERE

Regular End Semester Examination – Summer 2022

Course: B. Tech. **Branch : First Year** **Semester : II**

Subject Code & Name: **BTES205E Energy and Environment Engineering**

Max Marks: 60 **Date:29/08/2022** **Duration: 3.45 Hr.**

Instructions to the Students:

1. *All the questions are compulsory.*
2. *Each question carries 12 marks.*
3. *Illustrate your answers with neat sketches, diagram etc., wherever necessary*
4. *The level of question/expected answer as per OBE or the Course Outcome (CO) on which the question is based is mentioned in ( ) in front of the question.*
5. *Use of non-programmable scientific calculators is allowed.*
6. *Assume suitable data wherever necessary and mention it clearly.*

		(Level/CO)	Marks
Q. 1	**Solve Any Two of the following.**		
A)	Write the sequence of energy transformations taking place in the following: Nuclear power plant, Gas turbine and Hydro Power plant	BTES205-1/2	6
B)	Explain the function of following components used in power plant: i) Condenser ii) Nuclear Fuel. iii) Penstock.	BTES 205-3	6
C)	What is a nuclear chain reaction? Explain the importance of moderator and control rods in a nuclear reactor with respect to chain reaction?	BTES 205-1/3	6
Q.2	**Solve Any Two of the following.**		
A)	What is the source of tidal energy? What are the potential sites of tidal energy in India?	BTES 205-2/3	6
B)	What is Bio-mass? Write the percentage composition of Bio-gas. What are the environmental and health benefits of Bio-gas utilization?	BTES 205-2	6
C)	How the Wind mills are classified? Sketch the diagram of a HAWT, and explain the function of its main components.	BTES 205-2	6
Q. 3	**Solve the following.**		
A)	What do you understand by maximum energy efficiency in context with energy conservation principle? Discuss with a suitable example.	BTES 205-1	6
B)	How do you conserve the energy in pharmaceutical industry? Write the suitable measures.	BTES 205-1	6
Q.4	**Solve Any Two of the following.**		
A)	What are the fixed major sources of outdoor pollution? What effects does air pollution have on Health of animals and plants and materials.	BTES 205-1	6
B)	Differentiate between	BTES 205-4	6

i) Dust and smoke.
ii) Pollutants and Toxicant.
iii) Smoke and Smog.

C) Explain the types of water pollutants in brief. How do vehicles responsible for water pollution? BTES 205-4 6

Q. 5 Solve Any Four of the following.

A) What are the effects of noise pollution on children's health? BTES 205-4 3

B) What is marble cancer? How is Taj Mahal turning yellow? BTES 205-4 3

C) Write in brief about the sources of thermal pollution and its effects. BTES 205-4 3

D) How oil spills and sediments degrade the water quality? Explain. BTES 205-4 3

E) Write briefly about the major sources of noise pollution. BTES 205-4 3

F) What is radioactive pollution? What are its effects? BTES 205-4 3

***** End *****

DR. BABASAHEB AMBEDKAR TECHNOLOGICAL UNIVERSITY, LONERE

Regular End Semester Examination – Summer 2022

Course: B. Tech. (First Year All Branches Group B) **Semester : II**

Subject Code & Name:BTES203G Engineering Graphics

Max Marks: 60 **Date: 23/08/2022** **Duration: 5 Hrs.**

Instructions to the Students:

1. *All the questions are compulsory.*
2. *The level of question/expected answer as per OBE or the Course Outcome (CO) on which the question is based is mentioned in ( ) in front of the question.*
3. *Use of non-programmable scientific calculators is allowed.*
4. *Assume suitable data wherever necessary and mention it clearly.*

		(Level/CO)	Marks
Q. 1	**Solve the following.**		
A)	Construct a regular pentagon of 30 mm side by general method.	Remember	06
B)	Explain the different methods of dimensioning.	Understand	06
Q.2	**Solve Any one of the following.**		
A)	Draw the elevation, top view and side view of the object shown in figure 1. Alldimensions are in mm.	Apply	12

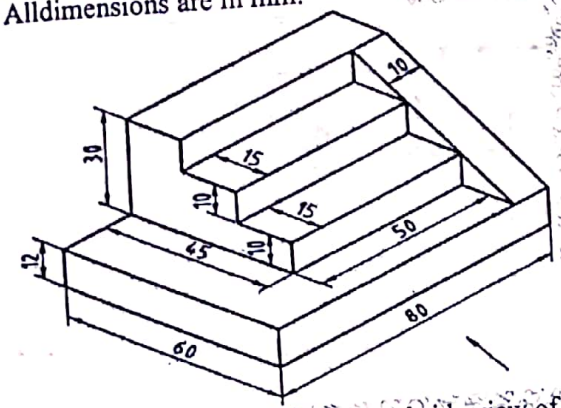

Figure:1

B)	Draw the elevation, top view and side view of the object shown in figure 2. All dimensions are in mm.	Apply	12

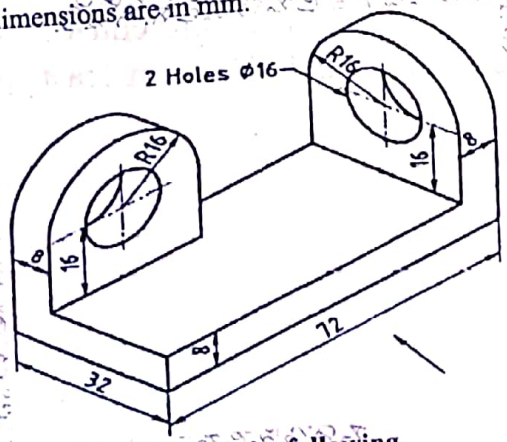

Figure: 2

Q. 3	**Solve Any Two of the following.**		
A)	Line AB is 75 mm long. It's F.V. and T.V. measure 50 mm & 60 mm long respectively. End A is 10 mm above H.P. and 15 mm in front of V.P. Draw projections of line AB if end B is in first quadrant. Find angle with HP and VP.	Evaluate	06
B)	End A of a line AB is 25 mm below HP and 35 mm behind VP. Line is 30^0 inclined to HP.There is a point P on AB contained by both HP & VP. Draw projections; find inclination with VP and traces.	Evaluate	06

C) A hexagonal plane has its one side in HP and Its apposite parallel side is 25 mm above HP and in VP. Draw its projections. Take side of hexagon 30 mm long. — Evaluate — 06

Q.4 Solve Any Two of the following.

A) A right circular cone, 40 mm base diameter and 60 mm long axis is resting on Hp on one point of base circle such that itsaxis makes 45^0inclination with HP and 40^0 inclination with VP. Draw it's projections. — Evaluate — 06

B) A frustum of regular hexagonal pyramid is standing on its larger base. On HP with one base side perpendicular to VP. Draw it's FV & TV. Project it's auxiliary TV on an AIP parallel to one of the slant edges showing TL.Base side is 50 mm long, top side is 30 mm long and 50 mm is height of frustum. — Evaluate — 06

C) A cylinder 40 mm diameter and 50 mm axis is resting on one point of a base circle on VP while it's axis makes 45^0 with VP and FV of the axis $35^0$with HP. Draw projections.. — Evaluate — 06

Q. 5 Solve the following. — Synthesize — 12

F.V. and S.V.of an object are given. Draw its isometric view.

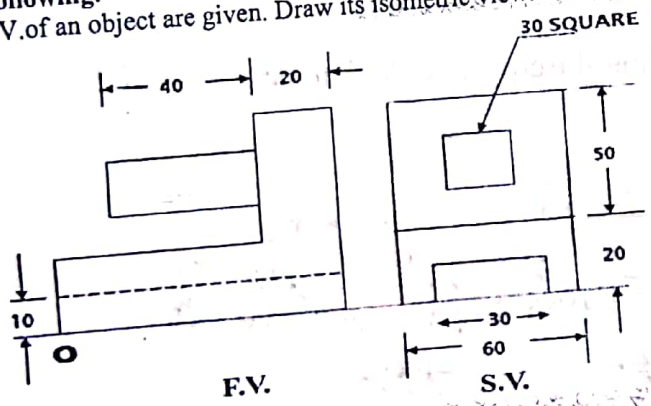

***** End *****

DR. BABASAHEB AMBEDKAR TECHNOLOGICAL UNIVERSITY, LONERE – RAIGAD 402 103

Summer End Semester Examination –2022

Branch: B. Tech. (Common to all) **Semester: II**

Subject with Subject Code: Engineering Mathematics – II (BTBS 201) **Marks: 60**

Date: 17/08/2022 **Time: 3.45 Hrs.**

Instructions to the Students

1. Illustrate your answers with neat sketches, diagrams, etc., wherever necessary.
2. If some part or parameter is noticed to be missing, you may appropriately assume it and should mention it clearly.

Q. 1

(a) If the sum and product of two complex numbers are real, show that those two numbers must be either real or conjugate. [4 Marks]

(b) Solve the equation $x^6 - i = 0$. [4 Marks]

(c) If $\tan(A + iB) = x + iy$, prove that [4 Marks]

(i) $\tan 2A = \frac{2x}{1-x^2-y^2}$ (ii) $\tanh 2B = \frac{2y}{1+x^2+y^2}$

Q. 2

(a) Solve: $\cos^2 x \frac{dy}{dx} + y = \tan x$. [4 Marks]

(b) Solve: $(x^2 + y^2)dx - xy\,dy = 0$. [4 Marks]

(c) Solve: $\frac{dy}{dx} + x \sin 2y = x^3 \cos^2 y$. [4 Marks]

Q. 3 Solve any THREE:

(a) Solve $(D^6 - D^4)y = x^2$. [4 Marks]

(b) Solve $(D^2 - 2D + 1)y = x\,e^x \cos x$. [4 Marks]

(c) Solve by the method of variation of parameters: $\frac{d^2y}{dx^2} + y = \operatorname{cosec} x$. [4 Marks]

(d) Solve; $x^2 \frac{d^2y}{dx^2} - 3x\frac{dy}{dx} + 5y = x^2 \sin(\log x)$. [4 Marks]

Q. 4 Solve any TWO:

(a) Find the Fourier series of the function $f(x) = x$ in the interval $(0, 2\pi)$. [6 Marks]

(b) Find the Fourier series expansion for the function $f(x) = x - x^2$ in $-1 < x < 1$. [6 Marks]

(c) Expand the function $f(x) = \pi x - x^2$ in a half-range sine series in the interval $(0, \pi)$. [6 Marks]

Q. 5 Solve any THREE

(a) Find $\nabla \cdot \vec{F}$, where $\vec{F} = \left(\frac{x}{r}\right)\hat{\imath} + \left(\frac{y}{r}\right)\hat{\jmath} + \left(\frac{z}{r}\right)\hat{k}$. [4 Marks]

(b) Find **curl** $\vec{F}$, where $\vec{F} = \nabla(x^3 + y^3 + z^3 - 3xyz)$. [4 Marks]

(c) If $\vec{r}$ is a position vector with $r = |\vec{r}|$, show that [4 Marks]

$\nabla^2 r^n = n(n+1)r^{n-2}$.

(d) Verify the Green's theorem for $\int_C \{(xy + y^2)dx + x^2 dy\}$ [4 Marks]

where C is bounded by $y = x$ and $y = x^2$.

****

DR. BABASAHEB AMBEDKAR TECHNOLOGICAL UNIVERSITY,

LONERE – RAIGAD 402 103

Summer End Semester Examination –2022

Branch: B. Tech. (Common to all) **Semester: II**

Subject with Subject Code: Engineering Mathematics – II (BTBS 201) **Marks: 60**

Date: 17/08/2022 **Time: 3.45 Hrs.**

Instructions to the Students

1. Illustrate your answers with neat sketches, diagrams, etc., wherever necessary.
2. If some part or parameter is noticed to be missing, you may appropriately assume it and should mention it clearly.

Q. 1

(a) If the sum and product of two complex numbers are real, show that those two numbers must be either real or conjugate. [4 *Marks*]

(b) Solve the equation $x^6 - i = 0$. [4 *Marks*]

(c) If $\tan(A + iB) = x + iy$, prove that

(i) $\tan 2A = \frac{2x}{1-x^2-y^2}$ (ii) $\tanh 2B = \frac{2y}{1+x^2+y^2}$. [4 *Marks*]

Q. 2

(a) Solve: $\cos^2 x \frac{dy}{dx} + y = \tan x$. [4 *Marks*]

(b) Solve: $(x^2 + y^2)dx - xy\, dy = 0$. [4 *Marks*]

(c) Solve: $\frac{dy}{dx} + x \sin 2y = x^3 \cos^2 y$. [4 *Marks*]

Q. 3 Solve any THREE:

(a) Solve $(D^6 - D^4)y = x^2$. [4 *Marks*]

(b) Solve $(D^2 - 2D + 1)y = x\, e^x \cos x$. [4 *Marks*]

(c) Solve by the method of variation of parameters: $\frac{d^2y}{dx^2} + y = \operatorname{cosec} x$. [4 *Marks*]

(d) Solve: $x^2 \frac{d^2y}{dx^2} - 3x\frac{dy}{dx} + 5y = x^2 \sin(\log x)$. [4 *Marks*]

Q. 4 Solve any TWO:

(a) Find the Fourier series of the function $f(x) = x$ in the interval $(0, 2\pi)$. [6 *Marks*]

(b) Find the Fourier series expansion for the function $f(x) = x - x^2$ in $-1 < x < 1$. [6 *Marks*]

(c) Expand the function $f(x) = \pi x - x^2$ in a half-range sine series in the interval $(0, \pi)$. [6 *Marks*]

Q. 5 Solve any THREE

(a) Find $\nabla \cdot \vec{F}$, where $\vec{F} = \left(\frac{x}{r}\right)\hat{\imath} + \left(\frac{y}{r}\right)\hat{\jmath} + \left(\frac{z}{r}\right)\hat{k}$. [4 *Marks*]

(b) Find $\text{curl}\,\vec{F}$, where $\vec{F} = \nabla(x^3 + y^3 + z^3 - 3xyz)$. [4 *Marks*]

(c) If $\vec{r}$ is a position vector with $r = |\vec{r}|$, show that

$\nabla^2 r^n = n(n+1)r^{n-2}$. [4 *Marks*]

(d) Verify the Green's theorem for $\int_C \{(xy + y^2)dx + x^2 dy\}$

where C is bounded by $y = x$ and $y = x^2$. [4 *Marks*]

****